Alchemy Power Inc.™

Tiny-UPS

Worlds tiniest UPS with GPIO indicator. Ideal for IoT devices, Raspberry Pi, Arduino, others

3.5cm x 2.8cm (1.1”x1.37”) full feature UPS

Key Features:

- **Tiny size –** 3.5cm x 2.8cm.
- **Mount:** Pi-Zero, ADC or other boards.
- **Output:** UPS 5V, 2A max, micro-USB and/or solder.
- **Battery:** Li-Ion or Li-Polymer batteries.
- **Power-in adapter:** 4.6V to 5.5V, 3A, micro-USB or solder.
- **Charging:** Limited to 1A, uses CC-CV charging.
- **GPIO:** GPIO high when battery is low. Connect buzzer for haptic feedback.
- **LED’s:** LED indicators for charge-in-process & charge completed; low battery LED.
- **Safety:** All electronics are turned off when battery V drops below 2.6V. Battery charges immediately when power is restored.
- **Low Drain:** < 100µA.
- **Use-case:** IoT devices, Arduino, Beagle, Raspberry-Pi, ODriod, others. Ideal for USB devices.
- **Maker:** Some soldering required.

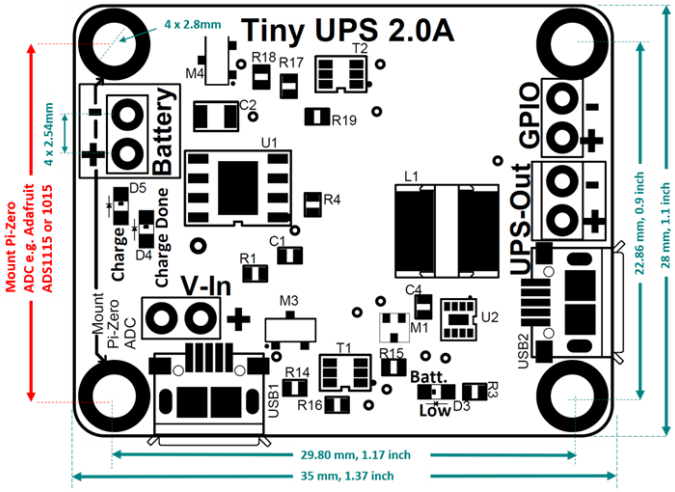

Tiny-UPS provides full UPS functionality for USB power. Use a Li-Polymer or Li-Ion battery to get the UPS functionality. Size and capacity of the battery does not matter to Tiny-UPS. The charge time and run time will change depending on the capacity of the battery. Tiny-UPS is an ideal power source for IoT devices and Single Board Computers (SBC) such as Raspberry Pi, Arduino, ODriod™, Android devices and other USB devices. Mounting holes allow Tiny-UPS to be mounted on a Raspberry Pi-Zero as well as the Adafruit™ ADS1115 (or ADS1015) ADC boards. Adding the Adafruit™ (or equivalent) ADC boards allows a user to measure operating parameters, such as temperature (of the battery), V-in, V-out, V-battery etc.

- Tiny-UPS requires a power source capable of providing 4.6V to 5.5V (ideal 5V), max 3 Amps (2A output, 1A for charging). Vin is powered via the Vin connect points or micro-USB connector close to the Vin connect points. Note: only one power source can be used between the Vin solder point or the micro-USB connector at any given time. Adding two simultaneous power sources will cause power loops.
  - When the micro-USB connector is used for power, the Vin connect points can be used to sense if power is on or off.
  - When power is on and the battery is being charged, power is supplied from the power adapter. The output V of Tiny-UPS reflects the V of the power adapter (less a few mV for ideal diode to protect reverse feedback).
- Choice of Li-Ion or Lithium-Polymer battery. Maximum battery charge Voltage for battery is 4.2V. Please use batteries rated for 4.2V.
- Battery charge current is limited to 1A. Battery is charged using CC-CV charging method. Depleted batteries are charged initially at a trickle charge current of 100mA to allow depleted batteries to recover gracefully.

© 2019 Alchemy Power Inc.™ All Rights Reserved.
All information subject to change without notice.

- Tiny-UPS output is regulated to be 5V (±1%), 2A max. Power Path control enables simultaneously use of Tiny-UPS and battery charging. When power fails, the UPS functionality takes over. UPS power lasts if the battery is more than 3V.
- GPIO enables Tiny-UPS to be used with smart devices. GPIO changes state (from 0 to 1) when battery Voltage falls below 3V. GPIO of 0V indicates battery is good. GPIO of 1 (3.0V to 2.8V), indicates battery is low and needs recharging soon. GPIO can be connected to a buzzer, a vibrator motor or other warning devices providing haptic feedback. Recommended max current is 20 mA.
- Sample Python code available for use with Linux based systems. Code can be adapted and used freely. Sample code is written for Raspberry Pi (Raspbian) systems.
- LEDs indicate battery charging **(green)**, charge completed **(blue)**, battery Low **(red)**. The Red LED can be used along with the GPIO connection for visual and haptic feedback.
- Power is shut off when battery V is 2.6V or lower.
- All connect points on Tiny-UPS are spaced 2.54 mm or 0.1 mil apart, allowing use of terminal blocks (e.g. OST OSTVN02A150) or JST connectors (from JST sales) or connector headers (e.g. 3M 961102-6404-AR).
    - 2.54 mm (0.1 inch) terminal blocks, JST connectors or connector headers are not included and can be purchased separately from Digikey, Mouser, RS-online etc.
- Battery will start charging and power is sourced from power supply when power is restored. Battery charging also starts when power is restored.
- Less than 100 μA drain current when input power is disconnected, and battery is connected to Tiny-UPS with no load. Charged battery can retain charge for a few years!
- Some soldering is required for connecting battery and GPIO for terminal blocks, connections etc.
- Four mounting holes, 2.8mm diameter allow Tiny-UPS to be mounted on a Raspberry Pi-Zero as well as other boards such as the Adafruit ADS 1x15. Use 2.5mm spacers. Some use-cases:
    - Mount to a Raspberry Pi-Zero
    - Mount an Adafruit Analog-Digital-Converter ADS1x15 to monitor Input-V, output-V, battery-V and anything else (e.g. temperature using a temperature probe). The mount points provide mechanical stability.
- Tiny-UPS can use protected or unprotected Lithium Ion or Lithium Polymer batteries. Since the batteries are not mounted on Tiny-UPS, it is recommended to use an ADC board to measure battery temperature and take corrective action.
- Tiny UPS can be used with USB chargers. Please make sure good quality USB charger and good quality USB cables are used with Tiny-UPS. Poor quality USB charge cables will cause a Voltage drop. Make sure good quality (22 Gauge or better) USB cables are used[1]. On Tiny-UPS, Input Voltage can vary from 4.6V to 5.5V to compensate for poor quality USB power or power adapters placed far away.
- Instant on – power to the output is available as soon as power is restored.
- Maximum charge current – 1.0 Amps.
- Maximum output current – 2.0 Amps. Please ensure that the batteries can support a minimum of 2.0 Amps. Also ensure that the power adapter (power supply) can support 3A or more; 2 Amps for the output load, 1 Amp for charging.
- Output Voltage converter average efficiency of ~90% provides a very efficient system with minimal losses.

Please visit www.alchemypower.com/products for additional information and sample python code.
Some soldering required.

[1] Please make sure to only use high quality USB chargers and USB cables with Tiny-UPS. Poor quality USB cables cause voltages to drop.

© 2019 Alchemy Power Inc.™ All Rights Reserved.
All information subject to change without notice.

Picture Gallery / Other Information

Operating Characteristics

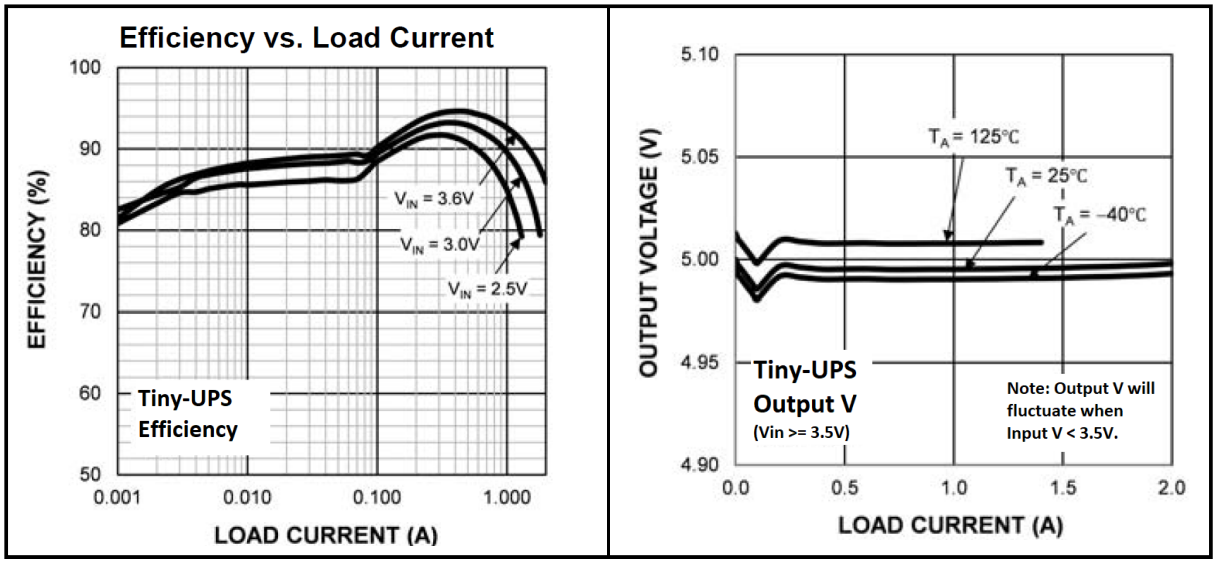

Operating characteristics © Microchip Inc.

Functional Block Diagram

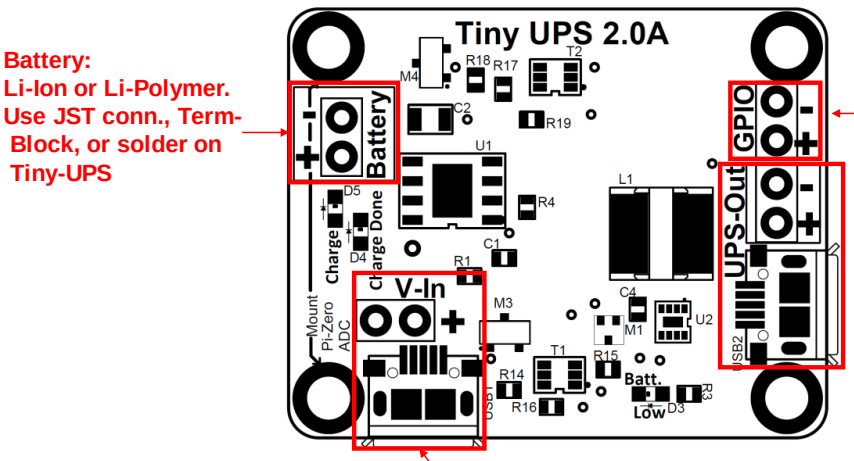

Battery:
Li-Ion or Li-Polymer.
Use JST conn., Term-Block, or solder on Tiny-UPS

GPIO – high when battery is low. Connect vibrating motor or audio buzzer or GPIO of device. solder points (term-block, connector header etc.)

UPS out. USB or solder points (term-block, connector header etc.)
5V – 2A max.

V-In via USB or solder points (term-block, connector header etc.)
4.6V to 5.5V

ks

© 2019 Alchemy Power Inc.™ All Rights Reserved.
All information subject to change without notice.

LED indicators

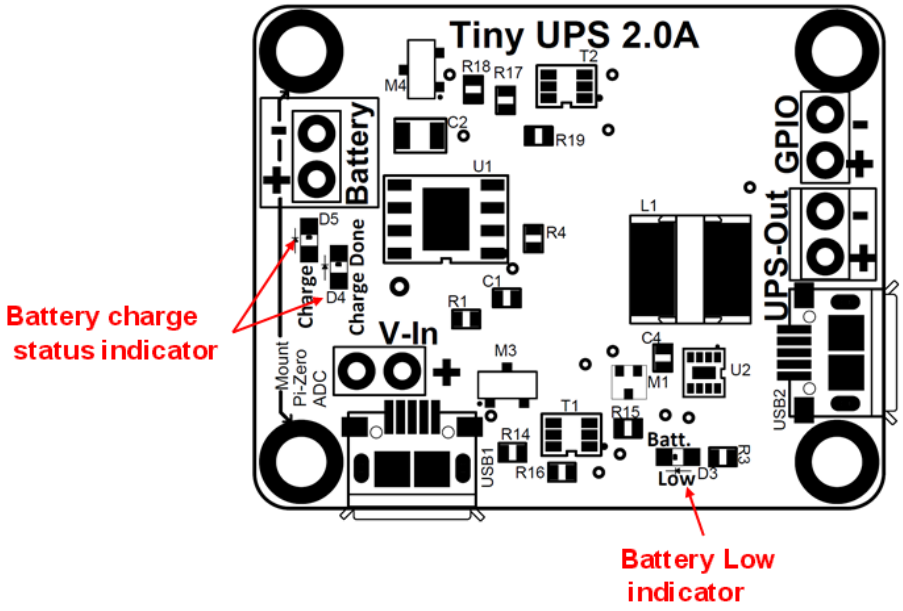

Mounting on Pi-Zero

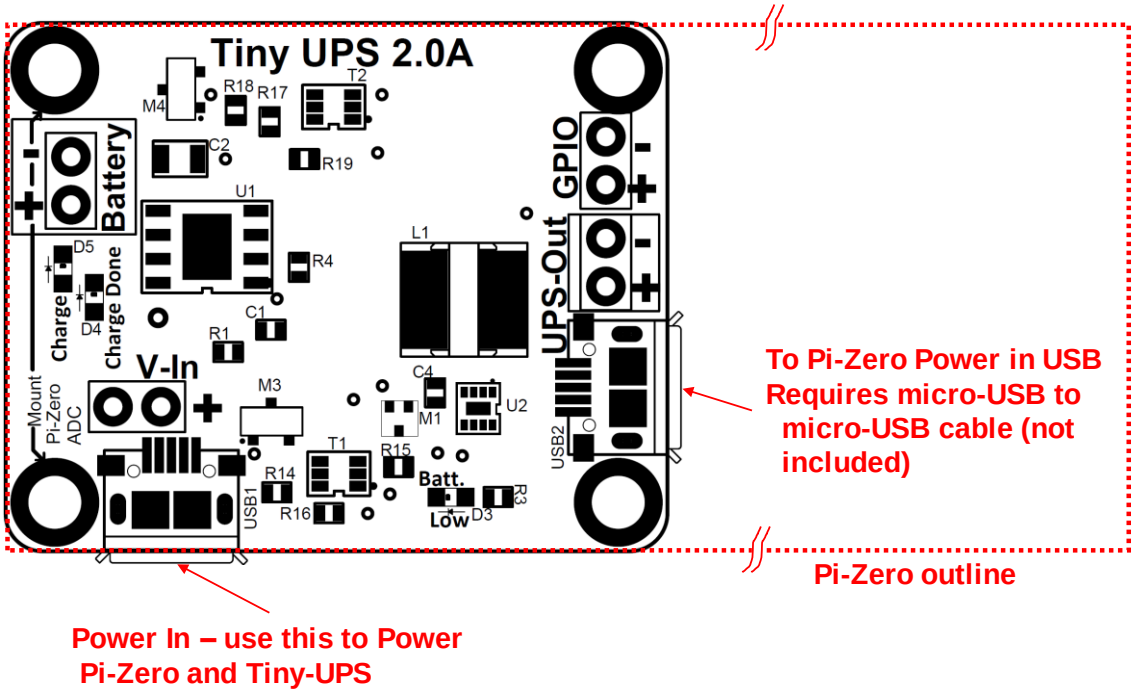

© 2019 Alchemy Power Inc.™ All Rights Reserved.
All information subject to change without notice.

Intentionally left blank.

© 2019 Alchemy Power Inc.™ All Rights Reserved.
All information subject to change without notice.

Specifications

General Information

Model Number: Tiny-UPS

Devices supported

Any IoT device, Single Board Computer (SBC) which needs 5V and 2A (or less) as a power source. Mounting holes match Raspberry Pi-Zero as well as ADC boards from Adafruit™.

Power

Input Power: Power-in from 4.6V to 5.5V, 3A to 3.5A power supply recommended.

Power connectors: micro-USB for Power-In and Power-Out. 2.54 mm solder points are provided on Tiny-UPS. Solder terminal blocks or directly solder onto board. Polarities + & - are marked on board.

Power Adapter: Not included.

Maximum Charge Current: 1.0 Amps.

Maximum Output Current: 2.0 Amps.

Ripple: Less than 25mV p-p.

Battery Low Trigger: Around 3.0 V

Battery Low hard-shutdown: At 2.6 V, all power is off, and the electronics are shuts down.

Operating Frequency: 300kHz.

Output

UPS Power: 4.9 V to 5.08 V via micro-USB UPS-Out connection point on the Tiny-UPS board. Output V may be lower as the battery V drops below 3.2V.

Output Step up (Boost) Frequency: 2 MHz

Batteries

Batteries: 4.2V Lithium Ion or Lithium-Polymer (Li-Po) battery. Battery can be protected or unprotected.

Battery capacity: Battery charging is based on CC-CV method and is independent of capacity. Charging time will vary based on battery capacity. Max charge current is 1A.

LEDs: Battery charge (green), Charge completed (blue). Blue or Green LED on indicates input power is on. Red battery indicates battery is low (3.2V or lower).

Battery polarity: As indicated on Tiny-UPS. **Inserting batteries incorrectly will damage the electronics and can cause the board to get very hot.**

Safety: Onboard Battery Charge Management (BCM) prevents over charging and deep discharging. On-board circuit detect when battery is at 3V or lower. GPIO changes state from low to high and Red LED tuns on to indicate low battery. At around 2.6V the electronics are turned off. **Note – since the battery is external to the board, there is no temperature monitor installed. Please make sure other provision are made to ensure the batteries do not get hot.**

Battery Charging: Uses CC-CV charging method. Max charge current 1A. Max trickle charge 125 mA (100mA typical).

Depleted Batteries: Senses depleted batteries (2.9V or lower) and uses low current charging, around 100mA, to bring charge level up. Once the battery level reaches 2.93V or more, CCCV charging is initiated.

Battery Full Charge Voltage: 4.2V

Trickle Current: When input Voltage is off; and load is disconnected, Tiny-UPS consumes less than 100µA. A fully charged battery remains charged for a long time, usually a few years!! Battery leakage current should also be factored in when calculating how long a charged battery will last.

GPIO

Voltage: 0 V to indicate GPIO state zero. 2.8 to 3.3 V indicates “high” GPIO state.

Max Current: Recommended max GPIO sink current is 20mA. Ideal for connecting GPIO to external buzzer or vibrators to indicate low battery level.

Operation: GPIO remains low when battery V ≥ 3 V. When battery V is <3 V, the GPIO changes state, i.e. from zero to one.

LEDs

Green: Indicates Power is on and battery is charging.

Blue: Indicates Power is on and battery is fully charged. When battery charge falls below 95% of

© 2019 Alchemy Power Inc.™ All Rights Reserved.
All information subject to change without notice.

charge level, the battery is charged again, using CC-CV methodology.

Red: Indicates battery is low and an alternate power source is needed. The system will shut off when the battery is depleted.

Spacers

M2.5mm spacers recommended. Not included.

On-Off Switch

Power On/Off: An on/off switch can be connected external to Tiny-UPS in series with UPS-out.

Dimensions

Board dimensions: 35mmx28mmx3mm (1 3/8"x 1" x 0.12").

Weight: About 5g (0.2 oz).

Headers: Use 2.54 mm terminal blocks (e.g. TE 282834-2 or On-Shore OSTVN02A150) or 2.54mm jumpers / connector blocks. Alternately, solder wires directly to the board.

Warranty

90-day limited warranty. Warranty voided by improper use.

Other Information

Temperature: Li-Ion batteries usually operate from 0°C to 40°C. It is recommended to use the board in the operating range of the battery.

Operating Humidity: 10% to 80% non-condensing.

RoHS Compliance: Electronic components, board etc. are RoHS compliant.

REACH Compliance: All components are sourced from reputable manufacturers, who comply with REACH requirements.

Recommended peripherals:

Please visit **www.alchemy-power.com/products** for other recommended products.

Code download:

www.alchemypower.com/downloads

Product Video: To be added later.

Raspberry Pi, Adafruit, Odroid, Arduino and other Trade Marks as shown in the document and belong to the respective trade mark holders. Please refer to the respective organizations for Trade Mark, right of use and other information.

Alchemy Power Inc.
2098 Walsh Avenue, Suite A, Santa Clara, CA 95050-2544.
Phone: 650.823.2316
Email: sales@alchemypower.com
www.alchemypower.com

© 2019 Alchemy Power Inc.™ All Rights Reserved.
All information subject to change without notice.